Clyde Radiators

COMMERCIAL HEATING SOLUTIONS

CURVE LADDER RAIL

TOWEL RAILS

Units 13-14 Charlwoods Road
East Grinstead, West Sussex, RH19 2HU
www.clyderadiators.co.uk 01342 305550

A brand of IRSAP, Italy's leading manufacturer of design led radiators.

EDS 1030/1 11.12.20

Contents

Clyde is a brand of the IRSAP; Italy's leading manufacturer of design led radiators. With over 50 years experience, we have the expertise to produce the best in quality & customer service.

Clyde provides bespoke solutions for LSTs, Cast Iron, Multi Column and Aluminium radiators. With a wide range of traditional and contemporary radiators, Clyde's solution based approach is designed to ensure we supply the ideal solution for all commercial and industrial requirements.

Our dedicated team of technical advisors and estimators will discuss your installation including the calculation of your heat output requirements (from drawings if necessary), arrange a full quotation based on your exact project specifications and provide lead times. They can also arrange a site visit from our National Sales Network if required.

For more information about Clyde or any of our products, please contact our customer service department: 01342 305522 / 305566

Curve Hydronic Range 4-5

Packaging, Contents, Bracket Positions 6

Commissioning & Carrying Towel Rail 7

Colour Options 8-9

Valves 10

CURVE HYDRONIC

TECHNICAL DATA

PRODUCT FEATURES

- 25mm curved cross tubes
- 40mm 'D' shaped collectors
- High quality Italian design and Manufacture
- Certified to UKCA Standard BS EN442
- White RAL 9016 and Chrome as standard, 25 RAL colours & 29 special finishes
- 10 Year guarantee
- Max. Working Temperature: 95°C

HEAT EMISSION RATES

- ΔT50 (75°C / 65°C / 20°C)
- ΔT55.5 (82°C / 71°C / 21°C)
- ΔT60 (90°C / 70°C / 20°C)
- BS EN 442-1 conditions of ΔT50

RANGE SELECTION

- 4 heights from 718mm to 1866mm
- 3 widths 398mm, 498mm & 598mm
- Hydronic or Electric options (see EDS 1040 for full electric range)

All Curve towel rails are available with a dual fuel option, please call 01342 305550 for more information

TECHNICAL DRAWINGS

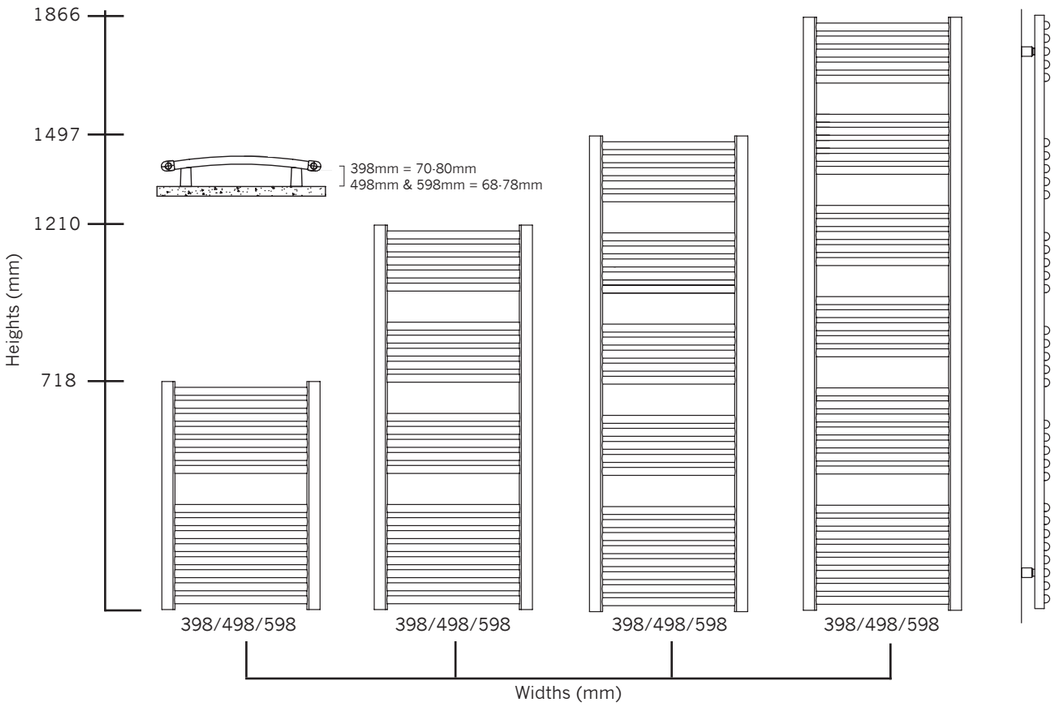

TECHNICAL SPECIFICATIONS

- Made from steel
- 1/2" flow and return
- Connection / blank bushes & airvent supplied with each towel rail
- Maximum operating pressure 8 bar
- Test Pressure 10.5 Bar

PIPE CENTRES

- Pipe centres left to right = width - 44mm
- Pipe centres from wall:
  398mm = 70mm - 80mm
  498/598mm wide = 68mm - 78mm
- Depth from wall:
  398mm wide = 95mm - 105mm
  498mm wide = 100mm - 110mm
  598mm wide = 105mm - 115mm

CURVE MODELS AND CODES - PAINTED

Model	BS EN 442 Emission Rates				Towel Rail Technical Details						
	75/65/20°C Δt50		82/71/21°C Δt55.5	90/70/20°C Δt60	Overall Height H (mm)	Overall Width W (mm)	Bore Interaxis (mm)	Depth D (mm)	Depth From Wall (mm)	Dry weight (kg)	Water content (litres)
	watts	exponent	watts	watts							
CURV7139	296	1.21	334	376	718	398	354	45	89-104	4.41	3.39
CURV7149	351	1.20	397	446	718	498	454	54	95-110	5.14	4.02
CURV7159	406	1.20	459	516	718	598	554	63.5	105-120	5.97	4.66
CURV1239	472	1.19	533	599	1210	398	354	45	89-104	6.90	5.41
CURV1249	557	1.19	629	707	1210	498	454	54	95-110	8.06	6.38
CURV1259	641	1.19	724	814	1210	598	554	63.5	105-120	9.32	7.35
CURV1439	578	1.24	653	734	1497	398	354	45	89-104	8.34	6.63
CURV1449	682	1.24	771	866	1497	498	454	54	95-110	9.84	7.81
CURV1459	785	1.24	887	997	1497	598	554	63.5	105-120	11.33	8.99
CURV1839	722	1.23	816	917	1866	398	354	45	89-104	10.38	8.27
CURV1849	851	1.22	962	1081	1866	498	454	54	95-110	12.25	9.75
CURV1859	980	1.21	1107	1245	1866	598	554	63.5	105-120	14.12	11.23

CURVE MODELS AND CODES - CHROME

Model	BS EN 442 Emission Rates				Towel Rail Technical Details						
	75/65/20°C Δt50		82/71/21°C Δt55.5	90/70/20°C Δt60	Overall Height H (mm)	Overall Width W (mm)	Bore Interaxis (mm)	Depth D (mm)	Depth From Wall (mm)	Dry weight (kg)	Water content (litres)
	watts	exponent	watts	watts							
CURV7139C	183	1.21	207	232	718	398	354	45	89-104	4.85	3.39
CURV7149C	218	1.20	246	277	718	498	454	54	95-110	5.65	4.02
CURV7159C	252	1.20	285	320	718	598	554	63.5	105-120	6.57	4.66
CURV1239C	292	1.19	330	371	1210	398	354	45	89-104	7.59	5.41
CURV1249C	345	1.19	390	438	1210	498	454	54	95-110	8.86	6.38
CURV1259C	398	1.19	450	505	1210	598	554	63.5	105-120	10.25	7.35
CURV1439C	359	1.24	406	456	1497	398	354	45	89-104	9.17	6.63
CURV1449C	423	1.24	478	537	1497	498	454	54	95-110	10.82	7.81
CURV1459C	487	1.24	550	618	1497	598	554	63.5	105-120	12.47	8.99
CURV1839C	448	1.23	506	569	1866	398	354	45	89-104	11.41	8.27
CURV1849C	528	1.22	597	671	1866	498	454	54	95-110	13.47	9.75
CURV1859C	608	1.21	687	772	1866	598	554	63.5	105-120	15.53	11.23

We offer a fully electric version of the Curve towel rail, please see EDS 1040 for full details and visit our website
www.clyderadiators.co.uk/curveelectric

PACKAGING, CONTENTS, BRACKET POSITIONS

PACKING & CONTENTS

Curve ladder rails are supplied in a polythene wrap and boxed.

You should have:

- 1 Towel Rail
- 4 Wall brackets (in parts)
- 1 Airvent

You will need:

- Tape measure
- Electric drill and bits
- Spirit level
- Screwdrivers
- Allen Key

BRACKET POSITIONS **Fig.1.**

L mm	L' mm	P mm	M1 mm
398	354	40	95-105
498	454	47	100-110
598	554	57	105-115

● = recommended bracket positions

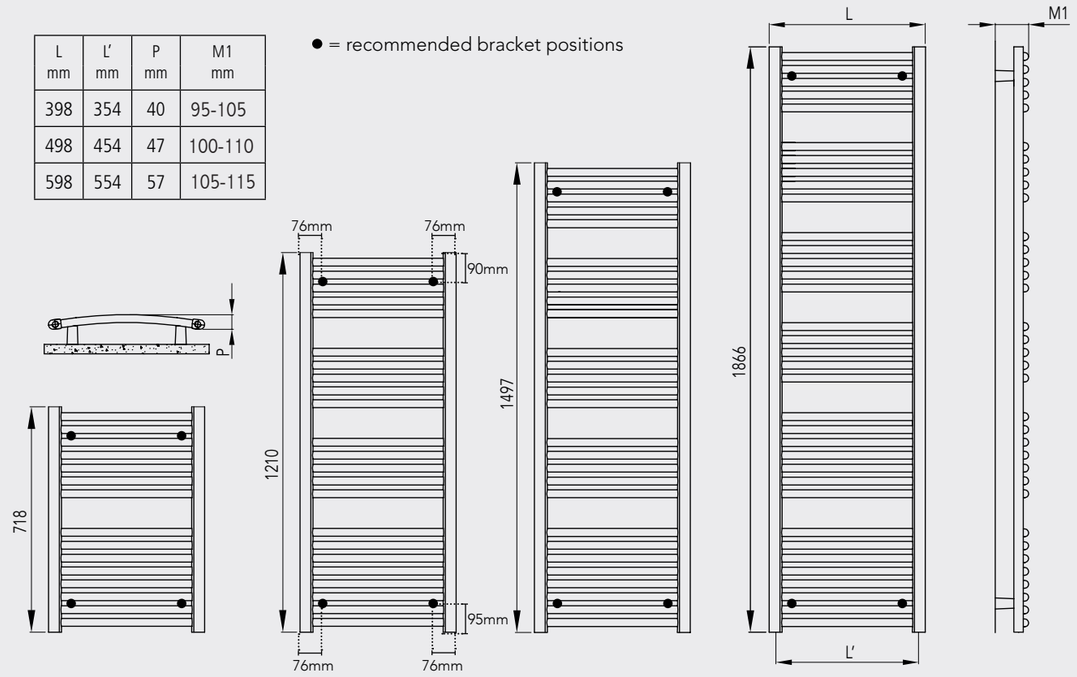

Fig.2.

Bracket Assembly

Before installing the towel rail please affix the provided air vent.

As per **Fig.1.** Bracket positions
Width = width of towel rail less 152mm (76mm either side)
Height =Top brackets should be 90mm down from the top of the towel rail.
Bottom brackets should be 95mm up from the base of the towel rail.

Mark brackets as per **Fig.1.** using a spirit level.

Fit Bracket sleeve **Fig.2.** to wall using suitable fixings.

Ensure that the grub screw on the sleeve is facing downwards.

Insert bracket body into the sleeves on the wall.

Offer towel rail up to the brackets and insert bracket head on the top two brackets and then onto the lower two brackets.

Ensure the towel rail is vertical and tighten grub screws on bracket sleeves.

Insert bracket caps.

PIPE CENTRES, COMMISSIONING, CARRYING RADIATORS

PIPE CENTRES

Pipe centres left to right = width minus 44 mm

Pipe centres from wall = 398mm wide = 70mm · 80mm
498mm wide = 68mm · 78mm
598mm wide = 68mm · 78mm

Depth from wall: 398mm wide = 95mm · 105mm
498mm wide = 100mm · 110mm
598mm wide = 105mm · 115mm

COMMISSIONING

Please Note: In accordance with Part L1 2006 of the Building Regulations and BS7593:1992 code of practice for the treatment of hot water and central heating systems, we strongly recommend flushing the heating system post installation of new radiators and then adding the correct quantity and type of inhibitor for use with your radiator and system to prevent corrosion. Damage caused to systems not protected by a suitable inhibitor will not be covered by manufacturer's guarantee.

CARRYING TOWEL RAILS

Always provide for sufficient manpower to make carrying safe. This towel rail should be carried in an upright position. Carrying the towel rail in a horizontal position (like a stretcher) will probably cause the towel rail to bow and potentially invalidate the warranty.

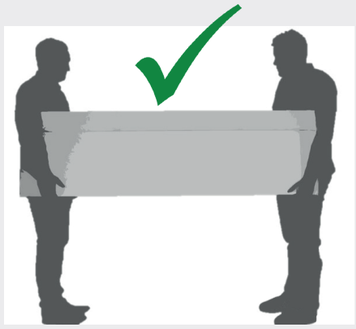

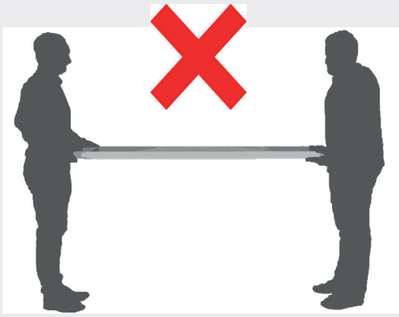

CURVE COLOUR OPTIONS - 25 RAL COLOURS

If you are looking to have your Curve towel rail in an alternative colour we offer the following RAL colour options, please specify chosen colour at time of order.

RAL 1001 · Beige

RAL 1013 · Oyster white

RAL 1015 · Light ivory

RAL 1019 · Grey beige

RAL 3000 · Flame red

RAL 3003 · Ruby red

RAL 3004 · Purple red

RAL 4003 · Heather violet

RAL 5024 · Pastel blue

RAL 6006 · Grey olive

RAL 6013 · Reed green

RAL 7016 · Anthracite grey

RAL 7032 · Pebble grey

RAL 7035 · Light grey

RAL 7040 · Window grey

RAL 7042 · Traffic grey A

RAL 7044 · Silk grey

RAL 8011 · Nut brown

RAL 8025 · Pale brown

RAL 9001· Cream

RAL 9004 · Signal black

RAL 9005 · Jet black

RAL 9006 · White aluminium

RAL 9007 · Grey aluminium

RAL 9010 · Pure white

To discuss a quotation for other colours outside of the above range please call 01342 305550

CURVE COLOUR OPTIONS - SPECIAL FINISHES

Choose from 29 Special finishes; Textured, Mottled, Metallics and Golds, please specify chosen colour at time of order.

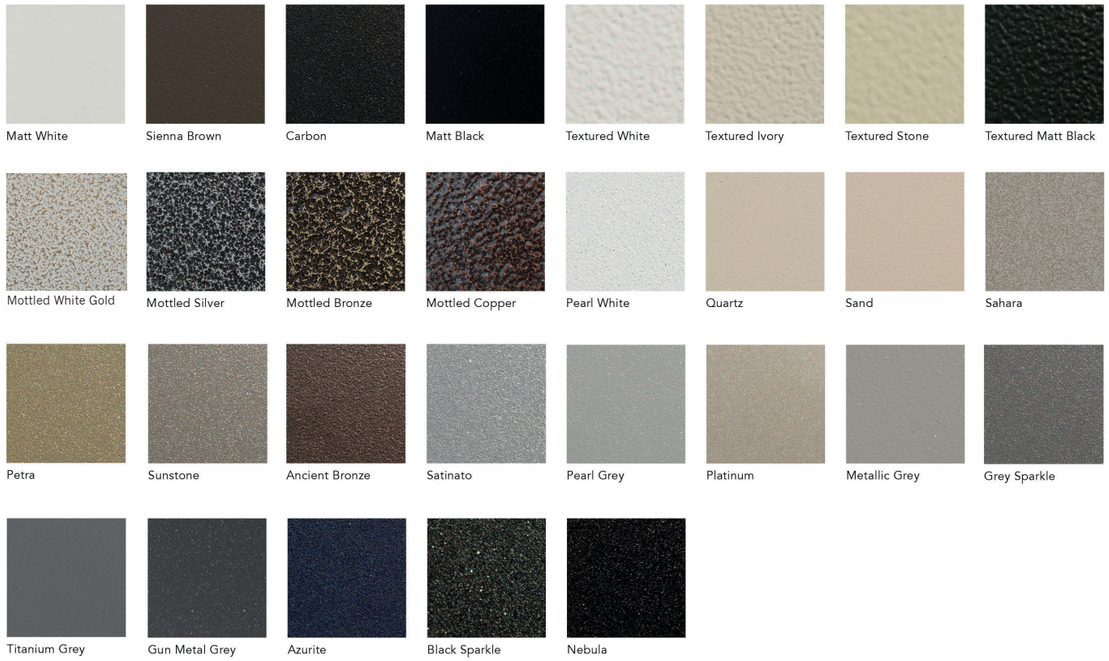

VALVES

Choose from our SUFFOLK, KENT or YORK valves to complement your Curve towel rail

SUFFOLK VALVE

- Available in Chrome and White
- Available in Angled & Straight Configurations
- Pipe centres for angled valves allow an extra 80mm in total
- Suffolk Valves are not Bi-directional
- Supplied in pairs with one Wheelhead & one Lockshield
- Valve height - 55mm

KENT VALVES

- Available in Chrome, White and Nickel
- Available in Angled & Straight Configurations
- Pipe centres for angled valves allow an extra 80mm in total
- Kent Valves are not Bi-directional
- Supplied in pairs with one Wheelhead & one Lockshield
- Valve height - 85mm

YORK VALVES

- Available in Chrome and Nickel
- Available in Angled Only
- Pipe centres for angled valves allow an extra 72mm in total
- York Valves are not Bi-directional
- Supplied in pairs with one Wheelhead & one Lockshield
- Valve height - 79mm

OTHER CLYDE PRODUCTS

Clyde Radiators

COMMERCIAL HEATING SOLUTIONS

- 6 Flat Panel radiators
- Lightweight & Efficient Sectional Aluminum
- Sectional Cast Iron in 4 differnet styles
- 2 Bespoke LST options, made to specification
- Sectional Steel Multi Column in over 3200 sizes

- Radiant Panels
- Trench: Practical aluminium convector for underfloor heating
- Mini: Aluminium and copper convector, in steel casing with aluminium grille

www.clyderadiators.co.uk